Safety Light Curtains
Body Resolution Series
SB4-*/*-D50 and SB4-*/*-D25



- **Safety Category 4 in conformity with EN 61496-1 and /-2**
- **Body resolution**
- **On board DIP-Switch selectable functions**
- **Failure dignosis by LEDs**
- **Easy alignment and mounting procedure**
- **Compact dimensions**
- **Approvals:**

Distributed by
General Safety Company Ltd.
(416) 645-0242

Product Description

Safety Light Curtains of Safety Category 4 in conformity with EN 61494-1 /-2.
The SB4- body resolution series is provided with partial / total muting function, automatic / manual restart mode. All the software dedicated is on board and the functions above can be selected and adjusted through the DIP switches placed in the receiver unit. The SB4 light curtain series can be effectively adopted along with the respective safety relay NL1/3-D, obtaining a complete safety package for many industrial applications.

Ordering Key

SB4-315/915-D50

- **Safety Barriers**
- **Safety Category**
- **Resolution**
- **Protected Height**
- **Operating Distance**

Type Selection

Height of the protected area	Resolution	Number of beams	Overall height H	Ordering no. Op. distance 25 m (82')	Ordering no. Op. distance 50 m (164')
515mm (20.28")	515mm (20.21")	2	652mm (25.66")	**SB4-515/515-D25**	**SB4-515/515-D50**
815mm (32.09")	415mm (16.34")	3	952mm (37.48")	**SB4-415/815-D25**	**SB4-415/815-D50**
915mm (36.02")	315mm (12.4")	4	1052mm (41.42")	**SB4-315/915-D25**	**SB4-315/915-D50**
1215mm (47.83")	415mm (16.34")	4	1342mm (52.83")	**SB4-415/1215-D25**	**SB4-415/1215-D50**

General Specifications

Resolution	See Type Selection table
Scanning distance	See Type Selection table
Dip-Switch selectable functions	Automatic or manual reset Partial or total muting
Other functions	Override
Response time	14 ms

Specifications are subject to change without notice (10.01.04)

Electrical Specifications

Power supply	24 Vdc ± 20%	**Light emission**	Infrared (880 nm)
Emitter consumption	70 mA max	**Output function**	2 PNP
Receiver consumption	100 mA max	**Output corrent**	0.5 max (on single output)

Environmental Specifications

Operating temperature	-10 to + 55°C	**Storage temperature**	-25 to + 70°C

Mechanical Specifications

Receiver connection	M 12 8-pole connector Standard shielded cable length: 3, 5 or 10 m	**Protection Degree**	IP 65
		Housing material	Painted aluminum (yellow Ral 1028)
Emitter connection	M 12 4-pole connector Standard shielded cable length: 3, 5 or 10 m	**Weight**	1.2 Kg max/m of total height

Dimensions

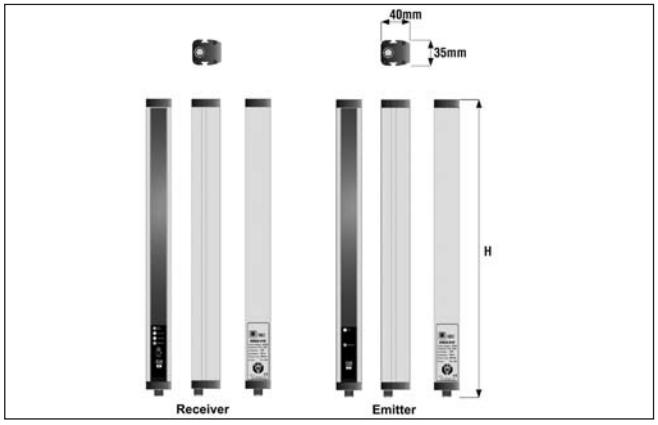

H = Overall height (see Type Selection)

Wiring Diagrams

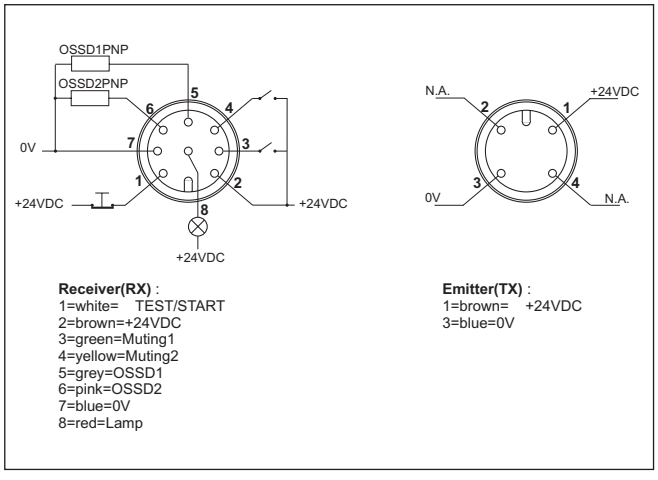

Receiver(RX) :
1=white= TEST/START
2=brown=+24VDC
3=green=Muting1
4=yellow=Muting2
5=grey=OSSD1
6=pink=OSSD2
7=blue=0V
8=red=Lamp

Emitter(TX) :
1=brown= +24VDC
3=blue=0V

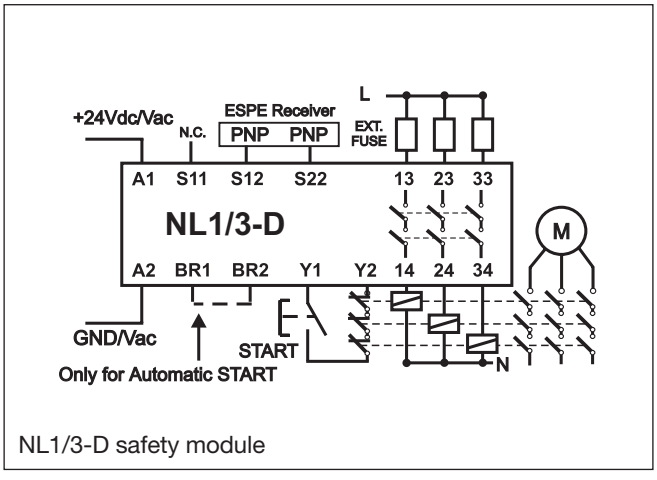

NL1/3-D safety module